AN-NAJAH NATIONAL UNIVERSITY

FACULTY OF ENGINEERING

DEPARTMENT OF MECHANICAL ENGINEERING

FORKLIFT DESIGN

Graduation Project I Submitted In Partial Fulfilment Of

The Requirements For The Degree of B.Sc. In Mechanical Engineering

Supervisor: students:	STUDENTS:	
Eng. Luqman Herzallah	Tareq Kolaib	(11244004)
	Amr Masri	(11214023)
	Abdallah Shawahni	(11317393)

Dec-2017

اهداء

لابد لنا ونحن نخطو خطواتنا الأخيرة في الحياة الجامعية من وقفة نعود إلى أعوام قضيناها في رحاب الجامعة مع أساتذتنا الكرام الذين قدموا لنا

الكثير باذلين بذلك جهودا كبيرة في بناء جيل الغد لتبعث الأمة من جديد ...

وقبل أن نمضي نقدم أسمى آيات الشكر والامتنان والتقدير والمحبة إلى الذين حملوا أقدس رسالة في الحياة ...

الى مشرفنا الدكتور لقمان حرز الله

إلى أمهاتنا وأباءنا

إلى أساتذتنا

إلى زملائنا وزميلاتنا

إلى الشموع التي تحترق لتضئ للآخرين

إلى كل من علمني حرفا

أهدي هذا البحث المتواضع راجياً من المولى

عز وجل أن يجد القبول والنجاح

# Acknowledgment

Getting through the past five years required more than academic support, and we have many, many people to thank for listening to and supporting us all the way. I cannot begin to express my gratitude and appreciation for their support.

we must thank our research supervisor,

Eng. Luqman Herzallah

Who has been patience and tolerant, without his assistance and dedicated involvement in every step throughout the process, this project would have never been accomplished. we would like to thank you very much for your support and understanding.

Finally, and most importantly, we would like to thank our family who were always helping us through our studying period.

DISCLAIMER

This report was written by students Amr Masri, Tariq Kolaib, Abdullah Shawahni at the Mechanical Engineering Department, Faculty of Engineering, An-Najah National University. It has not been altered or corrected, other than editorial corrections, as a result of assessment and it may contain language as well as content errors. The views expressed in it together with any outcomes and recommendations are solely those of the students. An-Najah National University accepts no responsibility or liability for the consequences of this report being used for a purpose other than the purpose for which it was commissioned.

Table of Contents

List of Figures

Nomenclature:

Symbol	Description
A	Cross-sectional area
A_t	tensile stress area
D	Diameter
d	Major diameter
dm	Pitch diameter
E	Modulus of elasticity
e	The overall efficiency in rising the load
F	Force
F_i	Preloadx
G	Modulus of rigidity
I	Moment of inertia
J	polar second moment of area, geometry factor
Jm	Unit second moment of area
k_a	surface condition modification factor
k_b	size modification factor
k_c	load modification factor
k_d	temperature modification factor
k_e	reliability factor
k_f	miscellaneous-effects modification factor
L	Lead, length
M	Internal bending moment
m	mass
N	Normal force, number of teeth's
n	Rotational speed (Rpm, rad/s)
n_f	Safety factor
P	Power (HP, watt)
p_n	normal circular pitch
p_t	transverse circular pitch
Q	statical moment of inertia
S_e'	rotary-beam test specimen endurance limit
S_e	endurance limit
S_y	Yield strength
S_{ut}	Ultimate strength
S_a	Goodman line, load line
T	Torque
Tr	Torque required to raise the load
V	Velocity, shear force
W	load, weight
W_t	transmitted load

W_r	radial load
W_a	axial load
δ	Deviation, elongation
θ	Angle, Weibull characteristic parameter
τ	Shear stress
σ	Normal stress
α	Half of the thread angle
μ	The coefficient of static friction

Abstract

Office machines are a set of mechanical, electrical and electronic that help to organize office, administrative and engineering work, and accomplish it quickly, accurately and proficiently. Our forklift is one of these machines that helps to perform some of the office work like save and transfer data and information. It saves time and effort, and it substitute the need for the working labor.

A forklift consists of three major systems: the power system, driving system, and loading system. Our design here is more concerned with the loading system.

the machine design is mainly composed of electric motors, wheels, gears, power screw and shafts.

Shirley's Mechanical Engineering Design and Theory of Machines and Mechanisms is the design book that is used in our calculations.

as for the results the power source, will be electrically powered with a battery working both as a source of power and a counterbalance for the forklift. it will be able to carry a mass of ten kilograms (10 kg), while the dimensions are, total width of the forklift is 0.3m, total length is 0.3m. and the package is lifted to a Height of 0.66m

Chapter 1: Introduction

Material handling and its transportation has always been a necessity throughout history, and Because of the different shapes and different packaging of the goods, loading and unloading became a very heavy process during transportation.

The solution to this problem was the invention of the forklifts, which is a powered industrial truck used to lift and move materials over short distances, they save time and space, they also eliminating the need for many people to handle the loading and unloading.

There are many types of forklifts, each type of forklifts class is designed for certain types of loads and specific working conditions, forklift operators have to pass a test specific to the type of forklift they will be using before they're allowed to operate.

Today, Forklifts are produced by hundreds of companies all over the world. most of the transportation operations are using forklifts,

and according to the allied market research forklifts truck market industry is expected to reach $51 Billion by 2022 (allied, 2017)

A forklift consists of three major systems: the power system, driving system, and loading system. Our design here is more concerned with the loading system.

During our project a machine that lifts objects and move it from one place to another at short distances will be made, our forklift is electric, it is good to use in offices, it is small but compact machines, designed to work in tight and narrow areas.

This machine is mainly composed of electric motors, wheels, bevel gear, spur gear, power screw,shafts, and sheet metals.

The project is divided into four chapters, the second chapter is about the constrains and the challenges that we had to overcome, the standards and earlier coursework are also mentioned in this chapter.

Chapter three contains the literature review, while chapter four is the methodology that was used in the design process, Chapter five contains Results, Analysis & discussion,

Conclusions and Recommendation can be found in Chapter six.

Chapter 2: Constraints, Standards and Earlier course work

2.1 Constraints

The challenges and problems that we encountered were related to the schedule or time and cost. The schedule specifies the timeline according to which those components will be delivered including the final deadline for completion because we have changed our design more than once to get the final shape. Cost involves the overall limit for the total amount that we spent. When we assembled the components we communicated with some experienced people in this field to get enough information.

2.2 Standards/Codes

In this project, the standard that will be used to do the calculations related to the forklift. isthe US standards in mechanical engineering.

The following code will be depended on, American society of mechanical engineers (ASME), The American Society for Testing and Materials (ASTM), American Society of Safety Engineers (ASSE) and Association for Computing Machinery (ACM) to do our works.

2.3 Earlier coursework

Earlier coursework and topics that are used in this project are

1. Mechanical engineering design
2. Theory of machines and mechanisms
3. Solid Works program

Chapter 3: literature review

3.1 Introduction

The forklift is a machine that lifts heavy materials in short distances, it has two systems one that lifts the material and used for loading packages (lifting system) and one for moving around (mobile system), just like a truck; that's why it is also called lift truck or fork truck

Today, the forklift is considered a very important piece of equipment, an indispensable machine in the field of manufacturing, in order to understand and design the forklift we first need to look at existing designs and types of forklifts.

3.2 The History of forklifts

World war I and world war II were horrible tragedies in the history of Humankind but these two wars were also the main reason that led to the development of the forklifts, and that is due to extreme need of military material handling and for the shortage of labour.

(Shao, 2015)states that the first forklift truck was invented between 1914 and 1915

And according to (mheda journal, 2013) the first lift truck that used hydraulic power was produced in 1920, three years later in 1923 the first electric truck with raising forks and elevated mast was produced,

but forklifts were not that popular at the time it wasn't until the late 1930 that forklifts were put on the market, World War II accelerated the development of the Forklifts significantly.

Since then the forklift industry blew up, In 2013 alone the top 20 manufacturers worldwide posted sales of $30.4 billion with 944,405 machines sold (Bond, 2013) ,Today, over 150,000 forklifts are delivered to material handling buyers each year.

3.3 Types of Forklift

Forklifts comes in various types and shapes, they can be classified based on their tiers, shapes, capacity, power, workplace adaptation etc...

But we will base our classification on two main features only, their power source and their shape.

3.3.1 Classification by shape

The most known shapes of forklifts are: counterbalance forklifts, reach truck, order picker, multi directional forklifts, side loaders and some other types that are designed for specific requirements

For the counterbalanced forklifts, they are the most common shape, it is what most people think of when thinking of forklifts.

As the name hints, counterbalance trucks use a counterbalance weight design, with a weight at the rear of the truck countering the load to be lifted at the front, see Figure 3.1

Counter balance is available as electric, gas or diesel powered.

Electric counterbalance forklift has an advantage over the gas powered one the electric machines are able to operate with a smaller counterweight because the battery works as a counter weight as well as a source of power. On counterbalance trucks, many have side shifts, a mast tilt facility, and often driver cabs. (Mitchell B. , 2017)

Figure 3.1 counterbalanced forklifts

There are many other shapes of forklifts like 3-wheel counterbalance forklifts, reach truck, order picker forklifts, multi directional forklifts, side loaders There is also narrow-aisle forklift, an electric forklift designed to function in small areas. These are narrower than standard forklifts, and they often have additional features like the ability to move the forks without moving the entire forklift or a cab that rises with the forks to improve driver visibility

Some other shapes of a forklift are rough terrain forklifts, Hand or Motorized pallet trucks, Swing mast trucks, Turret trucks.

3.3.2 Classification by Power Sources

based on the power sources there are two types of forklifts: electric powered forklifts and internal combustion powered forklifts.

The internal combustion forklifts run on gas, liquid propane, diesel or CNG (compressed natural gas) while electric forklifts powered by an electric motor, there are many differences between electric powered and internal combustion powered forklifts in capacity, price, running cost, maintenance cost and working conditions.

Electric forklifts use either rechargeable industrial batteries or external ways of conveying power like wire or rail. The electric forklifts are ideal for indoor conditions where there is low ventilation because they are quieter and do not exhaust like the gas powered forklifts ,but these types of forklifts can't be use while it's raining , they also have lower running-costs , but the problem with electric forklifts is that their capacity does not exceed 7 tons, and they run on batteries that need to be charged for 16 hours , like any other lift truck the electric variation is used to lift and transport materials for short distances but they also have a slower acceleration than those trucks that run on gas.

Electric forklifts are also rather large and forceful because they contain lead-acid batteries that are relatively large and heavy to power them. Many benefits to electric forklifts include no emissions or exhaust, reduced noise during operation, lower maintenance and servicing costs and a longer life span.

there are many types of electric forklifts classified based on their capacity, tyres, workplace adaptation, purpose of use, low or high maintenance and maintain an all-electric fleet.

core electric forklift, large electric forklift, 3-wheel electric forklift, stand up rider forklift, electric pneumatic forklift and high capacity electric cushion forklift these are some types of electric forklifts.

Core electric forklift is an ideal four-wheel electric lift truck this type has the ability to work in small spaces, used for indoor and warehouse. They are perfect for use when space is limited due to their tight turning circles and excellent manoeuvrability, they able to lift and move any standard load.

Figure 3.2 Core electric forklift

The large electric forklift has many advantages over other types, this type has good capacity you can lift up to 12000 Ib. used in heavy duty warehouses, with no fumes and limited maintenance cost.

Figure 3.3 the large electric forklift

The Three-Wheel Electric Forklift work the same as regular counterbalance forklift, the fact that there is only 3 wheels (the third wheel is in the center of the rear of the machine), this type is easyto maintain and has more flexibility, it used in narrow aisles and tight spaces.

Figure 3.4 The Three-Wheel Electric Forklift

Stand up rider forklift is an asset to any material handling job, it has high capacity (3000-4000 lb. lifting capacity). Stand up rider is a multi-purpose forklift has ultimate performance and comfort in use even in narrow places and aisles.

Figure 3.5 Stand up rider forklift

Electric pneumatic forklift is a green, provides the option for both indoor and outdoor use, has 4000 – 11000 ib. lifting capacity. Powerful and rugged enough to perform similar to internal combustion forklift, maintains clean air and low maintenance.

Figure 3.6 Electric pneumatic forklift

The High-Capacity Electric Cushion Forklift gives you the ability to lift massive loads (15000 – 40000 lb. lifting capacity) it is optimized to use for your largest indoor tasks

Figure 3.7 The High-Capacity Electric Cushion Forklift

Chapter 4: Methodology

In this chapter, we will discuss many things like:

1. The procedures that we will use to design the parts in our project and methods and sufficient detail for each procedure.
2. We will talk about the parts that not standard or not commercially available.
3. Consideration of the public safety measures.

4.1 Procedures and methods

We can adopt on Shigley's Mechanical Engineering Design and Theory of Machines andMechanismsin our calculations. (Richard G. Budynas, 2011)

4.1.1 Motor selection

Motors are a very widespread element in many devices. To work properly, the selection should take a careful step by step process that depends mainly on the intended operation of the motor. Therefore, before we start the process of motor selection, we must define what will the motor have to do, the performance objectives of the motor and the system, and how the motor will respond with the other system components (such as the power system). For doing the selection process we have to understand these parameters by focusing on what your system must fulfil, and that will help you to define the technical requirements.

Three stepper motors are used in this forklift design, the first is for lifting the weight, the second and third are for moving the wheels of the forklift.

4.1.1.1 Selecting the lifting motor

this motor is connected to the shaft which in turn transfer the movement to the bevel gear and then transfer enough power to turn the power screw that will work on lifting or lowering the cantilever.

As stated before the desired weight that the forklift ought to carry is 10 KG, and the estimated speed for lifting the cantilever and lowering them while loaded is approximately 0.1 m/s this value was an approximation with respect to the speed of a model of 1.5-ton electric DOOSAN forklift,

After establishing the initial performance targets, the next step is to start the translation of these targets into mechanical requirements. the motor performance requirement is the power.

Power can be calculated based on force and speed. Because work equals force times distance, the equation for power can be written in the following way:

$$P = \frac{W}{t} = \frac{Fs}{t}$$

Where,

P: is the power

s: distance travelled

t: time

However, the object's speed, v, is just s divided by t, so the equation breaks down to

$$P = \frac{W}{t} = \frac{Fs}{t} = Fv$$

In this case

$$F = ma = (10\ kg) * \left(9.81\ \frac{m}{s^2}\right) \approx 100\ N$$

And V= 0.1 m/s so we get

$$P = \frac{W}{t} = \frac{Fs}{t} = Fv = (100N)\left(0.1\frac{m}{s}\right) = 10\ W$$

Assuming that the efficiency of the system composed of the bevel gear and the shaft of the motor is 50% then the power of the stepper will be:

$$P = \frac{10W}{0.5} = 20\ W$$

$$P_{mech} = \frac{P_{mech}\ in\ Watt}{(converting\ factor)} = \frac{20}{746} = 0.026\ HP$$

So, we need a power of 0.026 HP on the motor.

For the speed of the motor and torque:

$$\boldsymbol{n}_{powerscrew} = \frac{lifting\ \boldsymbol{velocity}}{powerscrew\ \boldsymbol{circumference}}$$

$$\boldsymbol{n}_{powerscrew} = \frac{\boldsymbol{v}_{\boldsymbol{max}}}{(\boldsymbol{r}_{powerscrew})}$$

$$n_{wheel}\ (rad/s) = \frac{0.1\ m/s}{0.01\ m} = 10\ rad/s$$

This is the speed of the power screw but since the bevel gear has a ½ ratio then the speed of the stepper motor should be twice the speed of the power screw.

Then the speed of the motor is:

$$\boldsymbol{n}_{motor} = \boldsymbol{n}_{powerscrew} * 2$$

$$\boldsymbol{n}_{motor} = 10 * 2 = 20 rad/s$$

To find the torque of the stepper motor we use:

$$⍰ = P_{mech}/n$$

Where T= torque (N.m),

n= speed (rad/s),

P=power (watt)

$$⍰ = \frac{20}{20} = 1\ N.m$$

In conclusion the motor we need to lift the forks has:

A minimum Power= 0.026 HP

A minimum Speed= 191 rpm

A minimum torque= 1 N.m

4.1.1.2 Selecting the wheels motors

The rear wheels will be connected to a shaft transmitting motion between the two wheels, the shaft is connected to the motor that will give the rotational power.

the speed of the forklift is considered to be approximately 0.5 m/s. And if the maximum acceleration magnitude is at least twice that of the maximum velocity magnitude. Since the maximum velocity target is 0.5 m/s, then the target maximum acceleration rate is 1 m/s^2. Keeping in mind that these targets are still somewhat flexible as they are an interpretation of the need. The total mass that the forklift will be loaded with is (50 kg)

First the speed, this will be given in following equations: where r_{wheel} = 0.05m.

$$\boldsymbol{n_{wheel}} = \frac{\boldsymbol{cart\ velocity}}{\boldsymbol{wheel\ circumference}} \qquad (4-1)$$

$$\boldsymbol{n_{wheel}} = \frac{\boldsymbol{v_{max}}}{\boldsymbol{2\pi(r_{wheel})}} * \boldsymbol{60}$$

$$n_{wheel}\ (RPM) = \frac{0.5\ m/s}{2\pi(0.05m)} * \frac{60\ sec}{1\ min} = 95.49RPM$$

The rotational speed that has been calculated is the desired speed of the operating wheel of the system. And motors' data sheets given will give the ratings for a "No-Load" speed (n_0). So, the motor we'll select will require a rated "No-Load" speed greater than what we have calculated, because when the load is placed on the motor, the speed of the motor will slow down. The load we are talking about is mainly from the weight of the mass that is being lifted (10kg), the weight of the motor itself, the weight of the counterbalance, the weight of the forklift itself and the friction with the ground.

Second is the torque, look at figure (4.1) shown below:

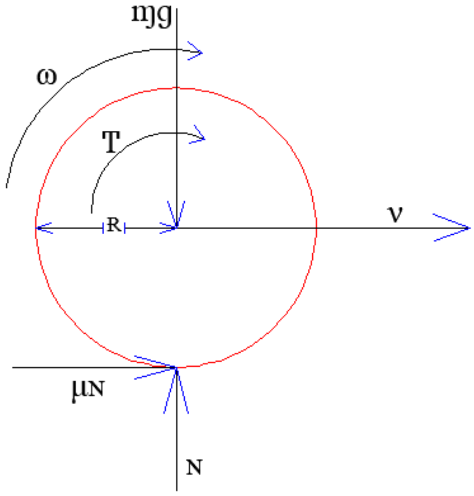

Figure 4.1 dynamic forces of the wheel

Where ɱ: mass over each wheel (50 /4) =12.5 KG

g: gravitational force = 9.81 m/s2

R: is the radius for each wheel, and that equals to 0.05 meter

ν: the velocity of the cart = 0.5m/s

μ: The coefficient of static friction for rubber on tile is 0.39 (franck, 2010)

$$Torque = Friction\ Force * radius\ of\ the\ wheel$$

□ $=F_{\text{friction}}$ * R wheel (4-2)

$$Friction\ Force = Normal\ Force * Friction\ coefficent$$

F_{friction}= N * μ (4-3)

$$Normal\ Force = Mass * Gravitational\ Force$$

N = ɱ*g (4-4)

$$= \frac{50\ kg}{4\ wheels} * 9.81 = 122.62\ N$$

$$F\ \text{friction} = 122.62 * 0.39 = 47.82\ N$$

$$□ = 47.82 * 0.05 = 2.39\ N.m$$

Based on the sample equations above, the torque is for one wheel only and since the motor will power two wheels then, the motor chosen should have a torque provided to the wheel greater than or equal to 4.78 Nm.

Power:

The speed and torque that been determined are also used to determine a power requirement for the motor. All motors are only able to output a maximum amount of power ($P_{mech,\ max}$). The power output from a motor can be used in mainly two (desired) ways: spinning its output shaft faster or spinning its output shaft with more torque. Hence, there is a trade-off between speed (n) and torque (�) in any motor's operation as shown in the equations below.

$$P_{mech} = � * n \qquad (4\text{-}5)$$

$$P_{mech}\left(Watts\ or\ \frac{Joule}{sec}\right) = \frac{� \ (Nm) * n(RPM)}{\frac{60\ sec}{1\ min} * \frac{1\ rotation}{2\pi\ radians}}$$

$$= \frac{(4.78)\ (Nm) * 95.5(RPM)}{\frac{60\ sec}{1\ min} * \frac{1\ rotation}{2\pi\ radians}} = 47.8\ \left(Watts\ or\ \frac{Joule}{sec}\right)$$

A minimum output power of 47.8 Watts is required to achieve the system level velocity and acceleration requirements. Because the motor supply two wheels, then we have to multiply it by 2 so can the motor runs the wheels;

$$P_{mech} = 47.8 * 2$$
$$= 95.6\ \left(Watts\ or\ \frac{Joule}{sec}\right)$$

Assumin that the effiecny of the motor is 70% so;

$$P_{mech} = \frac{(47.8 * 2)}{70\%}$$
$$= 136.58\ \left(Watts\ or\ \frac{Joule}{sec}\right)$$

$$P_{mech} = \frac{P_{mech}\ in\ Watt}{(converting\ factor)} = \frac{136.5}{746} = 0.18\ HP$$

In conclusion the motor we need for the wheels has:

A minimum Power= 0.18 HP

A minimum Speed= 95.5 rpm

A minimum torque= 4.78 N.m

Suppliers typically list motors by their mechanical power rating, hence why it was calculated above. However, just because a motor is rated to meet your power requirements, does not mean it will work for the operating point. Remember power is a combination of the speed and the torque, so there is a continumum of speed and torque pairings that will produce the same power.

4.1.2 Power screw

A power screw is a device used in machinery to change angular motion into linear motion, and to transmit power.

In our design the power screw will hold all the load in the cantilever therefor it is important to choose the right power screw that can endure all the force on it.

As shown in the Fig (4.2) the nut on the power screw is connected to two sliding rails, the sliding part of the rail is welded to the cantilevers.
The power is transmitted to the power screw from the stepper motor through the shaft then through the bevel gears, when the power screw turns the nut will lift/lower the cantilever depending on the direction of rotation for the motor.

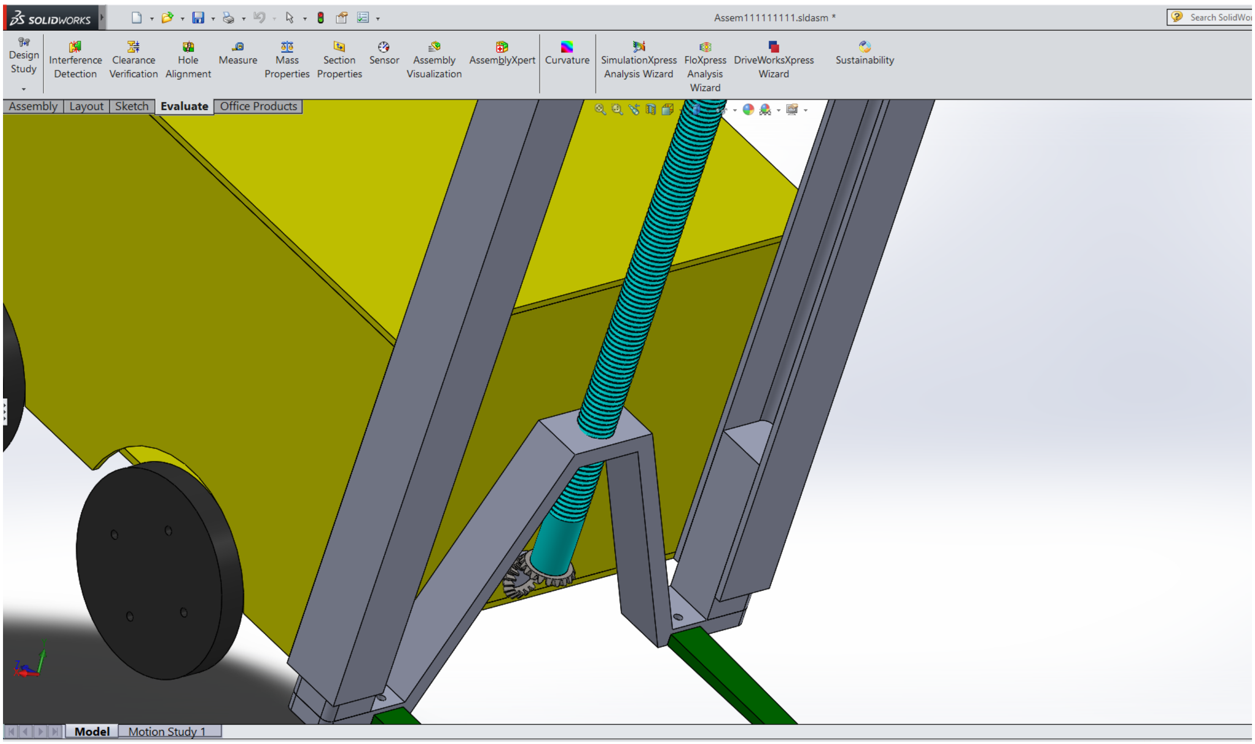

Figure 4.2 power screw mechanism

The main thing that needs to be checked when dealing with the power screw is to calculate if its self-locking or not, also we need to check the rising efficiency of the power screw.

First the specification of the power screw must be stated:

The power screw we decided to use is a double Acme thread that has a pitch=2mm, major diameter=20mm, the material of the power screw is steel 304, and thread angle(2α) =29°

We can adopt on Shigley's Mechanical Engineering Design and Theory of Machines and Mechanisms in our calculations. (Richard G. Budynas, 2011)

To find the pitch diameter:

$$dm = D - \frac{p}{2} \qquad (4\text{-}6)$$

$$\text{dm} = 20 - \frac{2}{2} = 19mm$$

Where dm= pitch diameter.
d=major diameter.
p=pitch.

To find the Lead:

$$L = n * p \qquad (4-7)$$

$$L = 2 * 2 = 4$$

Where L: lead.

n: double thread.

knowing that the load is 10Kg then the force applied is F = 100N = 0.1KN.

Maximum friction (f)= 0.15 (Richard G. Budynas, 2011)

the torque required to raise the load can be found by the following equation (Richard G. Budynas, 2011):

$$Tr = \frac{Fdm}{2} * \left(\frac{1+\pi*f*dm*sec\alpha}{\pi*dm-f*L*sec\alpha}\right) \qquad (4\text{-}8)$$

Where Tr: torque required to raise the load.

F: force from load.

f=friction between nut and power screw.

α=half of the thread angle.

Substituting the values in equation (4-8) we get

Tr= 0.212 N.m

the efficiency of the power screw can be found by the following equation: (Richard G. Budynas, 2011)

$$e = \frac{T\circ}{Tr} = \frac{F * L}{2 * \pi * Tr} \qquad (4-9)$$

$$e = \frac{0.1 * 4}{2 * \pi * 0.212} = 0.30$$

Where e: the overall efficiency in rising the load

Now, the power screw needs to be if its self-locking or not

It may turn out, in specific instances where the lead is large, or the friction is low, that the load will lower itself by causing the screw to spin without any external effort, that's why the screw has to be self-locking

the screw is said to be self-locking if the following condition is met:

$$\pi f dm > L$$

In our case

$$(3.14 * 0.15 * 19) > 4$$

$$8.95 > 4$$

The condition is met, Therefor the power screw we selected is self-locking.

4.1.3 Forks design

the fork is the part that will hold the load, it is connected to the sliding part of the rails by welding, therefor it is subjected to failure due to bending and shear, also the bolts holding the fork must be inspected, and proper calculations should be made to ensure it can endure the load.

there are two forks that will endure the load (10Kg), which means each fork will hold half of the maximum load (5Kg).

in order to find the factor of safety, the geometry of the fork should be stated,

the shape of this fork is a rectangle the area is symmetric throughout the length of the fork, except the slight change of area at the end of the fork, which will be ignored, due to its small effect on the calculations.

The rectangle fork has a thickness of 10mm, a width of 20mm, and a length of 180 mm. thickness*width*length = (0.01*0.02*0.18) m.

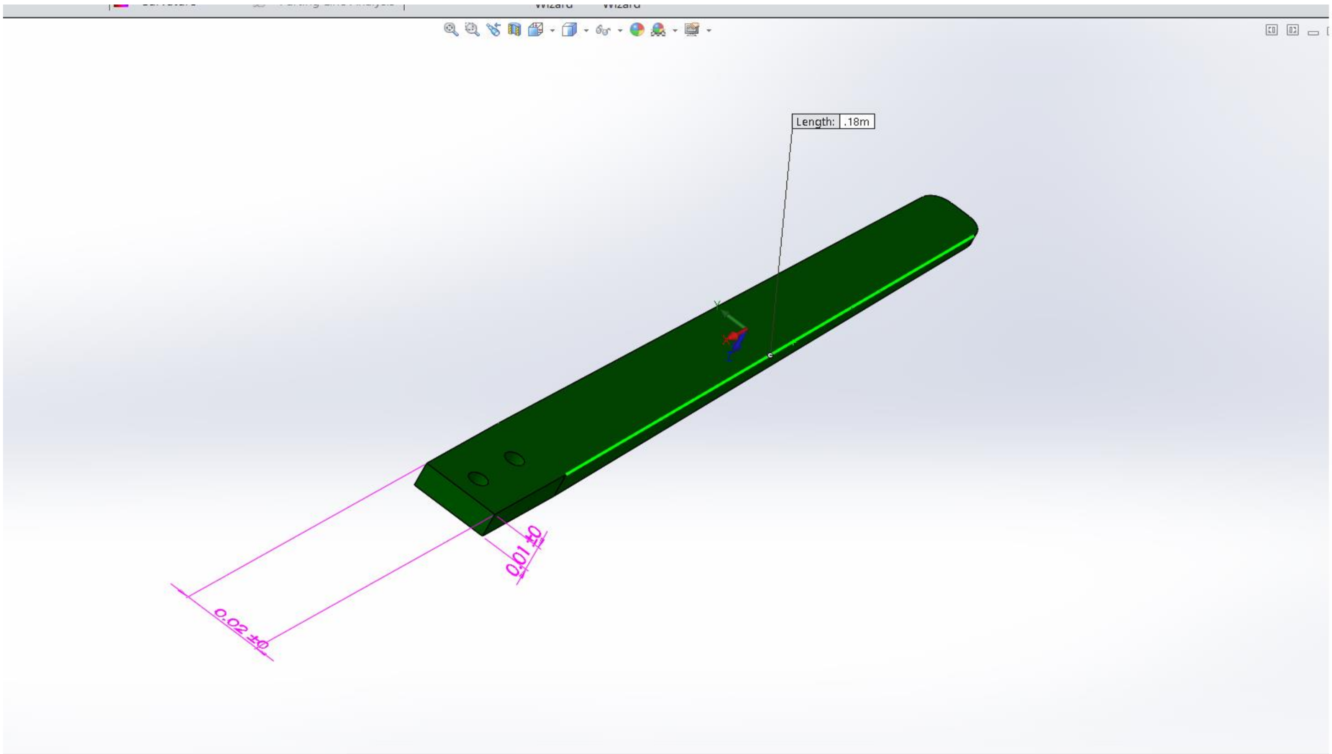

Figure 4.3 Forks dimension

The material used to make the forks is AISI 1050 carbon steel, we choose this material because its availability in the market, and it is cheaper compared to other carbon steel.

AISI carbon steel has a Yield strength of 580 MPa.

To calculate the maximum bending and shear possible, the load (50N) is assumed to be at the edge of the fork.

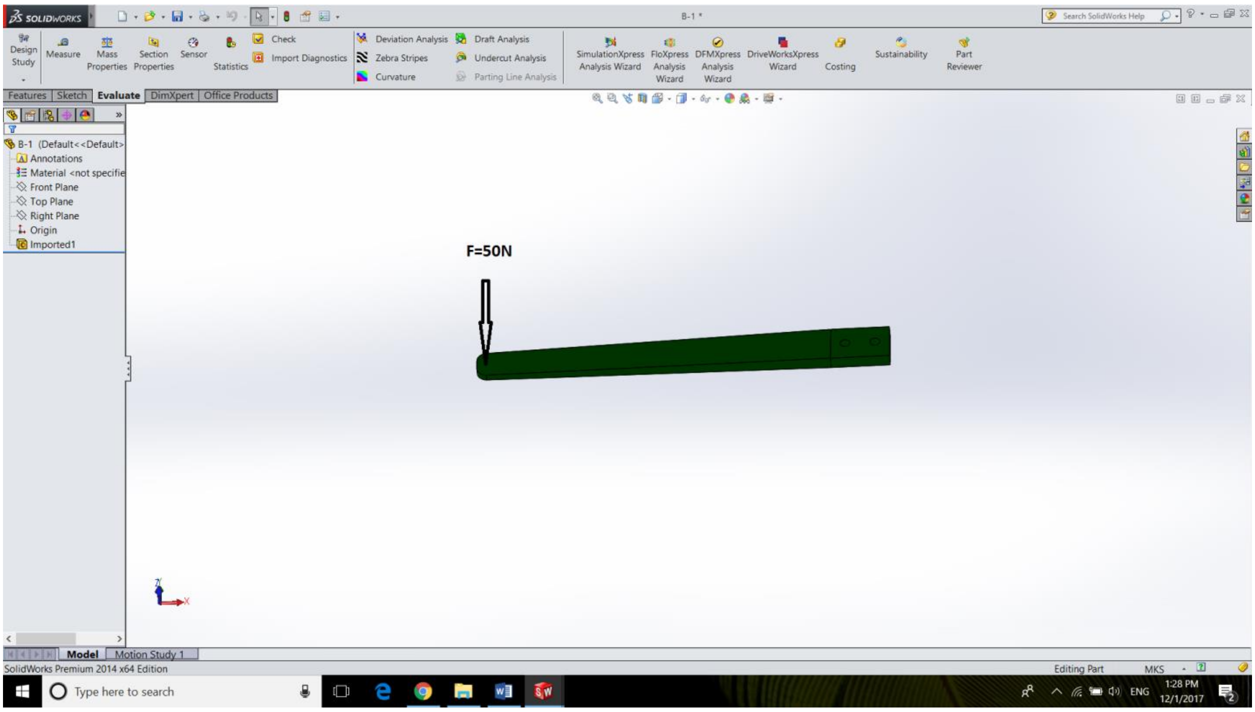

Figure 4.4 Forks design

4.1.3.1 Bending stress

The factor of safety:

$$FOS = \frac{yield\ stress}{working\ stress} \qquad (4-10)$$

Bending moment:

$$\sigma = \frac{\mathrm{My}}{\mathrm{I}} \qquad (4-11)$$

where:

σ =bending moment.

M =the internal bending moment about the section's neutral axis.

y =the perpendicular distance from the neutral axis to a point on the section.

I =the moment of inertia of the section area about the neutral axis.

We want the maximum bending stress therefor we choose the farthest point on the section from the neutral axis, the equation becomes:

$$\sigma\text{max} = \frac{\text{Mc}}{\text{I}}$$

where:

σ = maximum bending stress.

c=the perpendicular distance from the neutral axis to the farthest point on the section.

In our project the values according to the previous information are

$M = Force * distance = 50(N) * 0.18(m) = 9\ N.m$

$c = 5 * 10^{-3}\ m$

$I = \frac{1}{12} * b * h^3 = \frac{1}{12} * 0.02 * 0.01^3 = 1.666 * 10^{-9}\ m^4$

Therefor the maximum bending stress is:

$$\sigma\text{max} = \frac{\text{Mc}}{\text{I}} = \frac{9 * 5 * 10^{-3}}{1.666 * 10^{-9}} = 27\ MPa$$

$$FOS = \frac{yield\ stress}{maximum\ bending\ stress} = \frac{580MPa}{27MPa} = 21.48$$

The factor is safety here is noticeably high, because of the very low load that is designed to carry 10Kg, it is safe to say that there will be no bending failure.

4.1.3.2 Shear stress

$$\tau = \frac{\mathrm{VQ}}{\mathrm{It}} \qquad (4-12)$$

Where:
τ = the shear stress.
V = total shear force at the location in question.
Q = statical moment of area.
t = thickness (width) in the material perpendicular to the shear.
I = Moment of Inertia of the entire cross-sectional area.

For the statical moment of area the equation is:

$$Q = \sum AY \qquad (4-13)$$

Where:
A = area of cut-off area.
Y= the distance between the center of the cut-off area and the neutral axis.

In our project the values according to the previous information are

$A = \frac{0.01}{2} * 0.02 = 1 * 10^{-4}\ m^2$

$Y = 2.5 * 10^{-3}$ m

$Q = 2.5 * 10^{-7} m^3$

$I = \frac{1}{12} * b * h^3 = \frac{1}{12} * 0.02 * 0.01^3 = 1.666 * 10^{-9}\ m^4$

$V = 50N$

The point on the body which we will calculate on is a point on the natural axis because in this point we get the maximum shear possible.

$$\tau \max = \frac{VQ}{It} = 0.37037\, MPa$$

4.1.3.3 Welding of forks

the welding process is done by welding together a collection of metal shapes, the parts that are welded are held securely together.

In this project the two parts that will be welded are the fork and the body of the nut in the power screw as shown in the figure (4.5) below, the two blue lines represent the welding line.

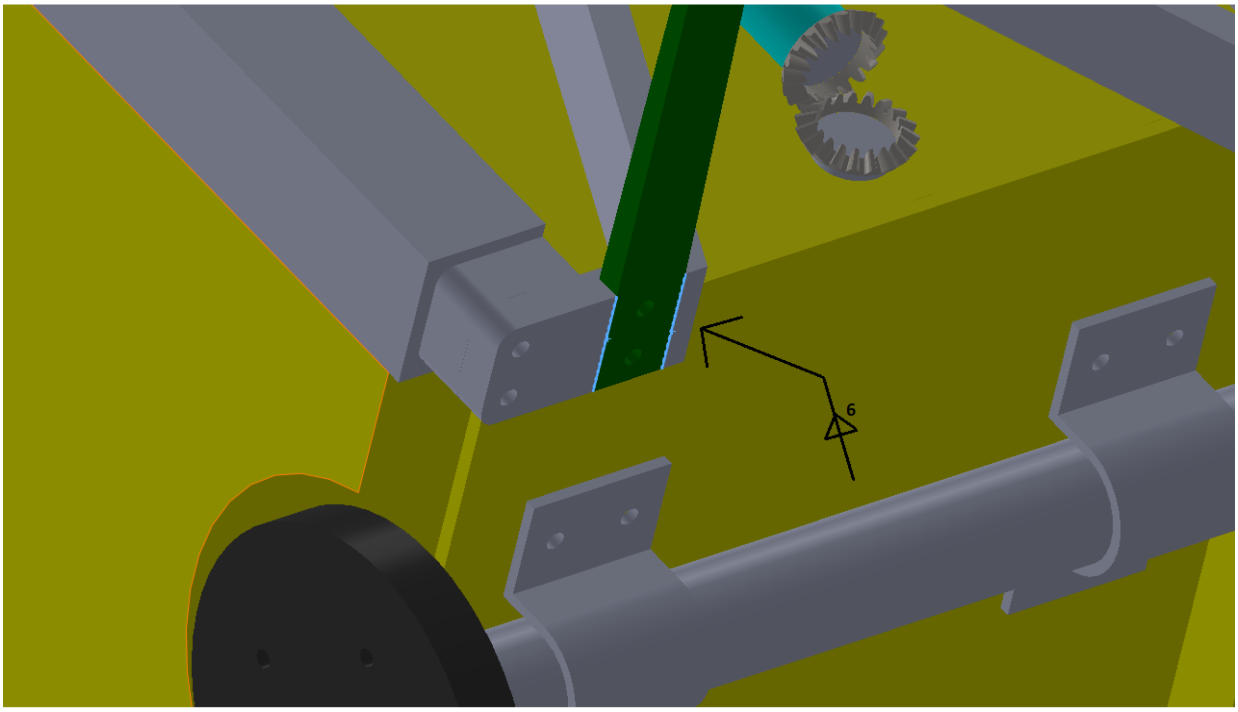

Figure 4.5 welding of forks

Fillet Welds are used in this project,
the force F on each fork is 50N, it has a torsional effect on the fillet welding and since the force is acting on the centre of the two welding lines that are shown in fig.1 then the load is equal to F/2 for each fillet weld, calculating only one of the welding lines would be enough to know the factor of safety,

therefore, from shigleys mechanical engineering design book, we used the first choice of table 9-1 torsional properties of fillet welds see figure (4.6). (Richard G. Budynas, 2011)

Table 9–1

Torsional Properties of Fillet Welds*

Weld	Throat Area	Location of G	Unit Second Polar Moment of Area
1. 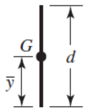	$A = 0.707\,hd$	$\bar{x} = 0$ $\bar{y} = d/2$	$J_u = d^3/12$

Figure 4.6 torsional properties of fillet welds

The torsion of the welds is given by the following equation

$$\tau = \frac{M * r}{J} \qquad (4-14)$$

Where τ= torsion of the welds

M= the moment

r = is the distance from the centroid of the weld group to the point in the weld of interest. (r in our case is the farthest distance from the centroid of the weld group.)

J= is the second polar moment of area of the weld group about the centroid of the group.

With reference to figure (4.5) and figure (4.6) our dimensions are:

d=30mm, y’=15mm, h=6

form the dimensions above we get

$$A = 0.707hd = 0.707 * 6 * 30$$

$$A = 127.26\, mm^3$$

The unit second moment of inertia is:

$$Ju = \frac{d^3}{12} = \frac{30^3}{12}$$

$$Ju = 2250\, mm$$

Therefor the moment of inertia is:

$$J = 0.707 * h * Ju$$

$$= 0.707 * 6 * 2250$$

$$J = 9544.5\ mm^4$$

To find the moment:

M=(force) * (distance from the force to the center of welding)

The force is F/2= 25 N and the distance to the center of the welding is 195mm.

So, the moment on the welding is:

M= 25N*195mm

M=4875 N.mm

The given values are M= 4875 N.m, c= 10mm, J=9544.5 mm^4

Substituting the values in equation (1) we get

$$\boldsymbol{\tau} = \frac{4875 * 10}{9544.5} = 5.107MPa$$

the material used in the welding is assumed to be E60XX from table 9-3 in the design book we get 345MPa

then the factor of safety for the ending of the fillet welding is:

$FOS = \frac{yield\ stress}{maximum\ bending\ stress} = \frac{345}{5.107} = 67.5$ (safe)

Safety factor for shear stress:

$$FOS = \frac{yield\ stress * 0.5}{maximum\ shear\ stress} \qquad (4-15)$$

$$FOS = \frac{yield\ stress * 0.5}{maximum\ shear\ stress} = \frac{580 * 0.5}{0.37037} = 783$$

4.1.4 Bevel Gears

Gears are used to transmit power; however, bevel gears are used to transmit motion between two intersecting shafts, in this case these shafts are the power screw shaft and the motor shaft.

The input bevel gear is called the "bevel pinion" which is the small gear between the two.

The pinion is half the diameter of the large bevel gear, which means Not only will the bevel gears transmit motion from a horizontal shaft to a vertical shaft, but they will also convert speed input to torque output.

A force analysis on the bevel gears is necessary to check the load on the bearing and shaft connected to it.

Since meshed gears are reasonably efficient, with losses of less than 2 percent, the power is generally treated as constant through the mesh.

To start the force analysis, we first need to identify the equations used according to Shigley mechanical engineering design (Richard G. Budynas, 2011)

To find the tangential force Wt transmitted load:

$$Wt = \frac{60000 * P}{\pi * d * n} \qquad (4-16)$$

Where Wt = transmitted load, kN

P = power, kW

d = gear diameter, mm

n = speed, rev/min

The forces acting at the center of the tooth are shown in ***Figure 4.7***. The resultant force W has three components: a tangential force Wt, a radial force Wr, and an axial force Wa. From the trigonometry of the figure,

$$W_r = W_t \tan \varphi \cos \gamma \qquad (4\text{-}17)$$

$$W_a = W_t \tan \varphi \sin \gamma \qquad (4\text{-}18)$$

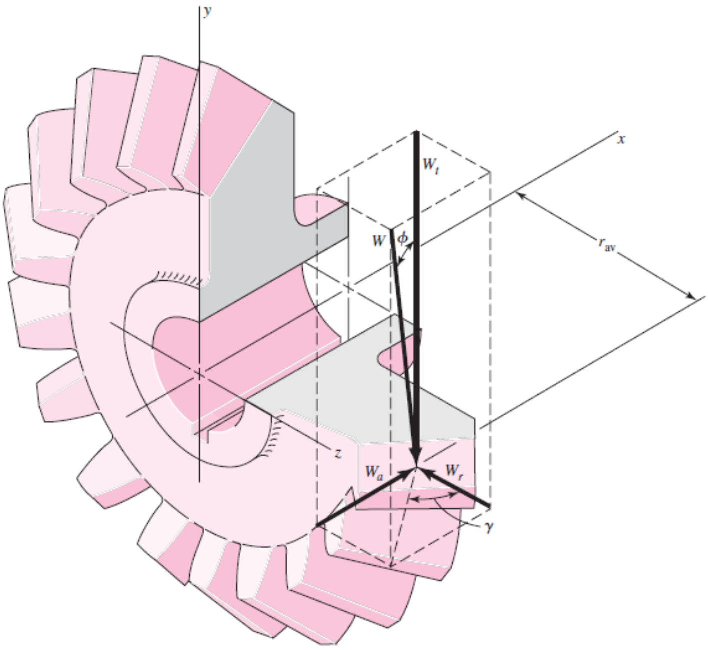

Figure 4.7 bevel gear tooth forces

The way the two bevel gears are connected in the forklift is shown in the ***Figure 4.8*** below, but note that the pinion is half the size of the bevel gear and not the same size as it is shown in figure 2.

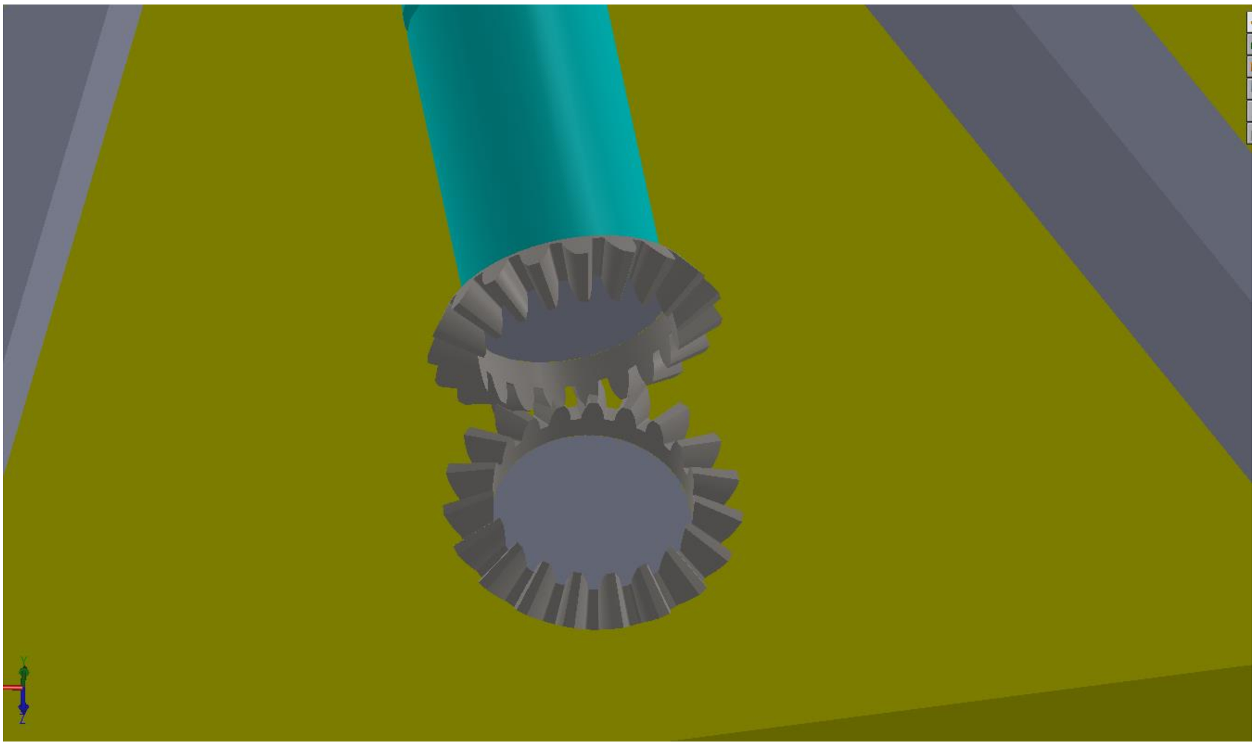

Figure 4.8 bevel gears

The diameter of the bevel pinion used in this project is 30mm and the diameter for the gear is 60mm. The bevel pinion transmits power of 0.02 KW to the large bevel gear, and rotates at a speed of 200 rpm.

The pitch angles are:

$\varphi = \tan^{-1}(30/60) = 26.6$ degree
$\gamma = \tan^{-1}(60/30) = 63.43$ degree

The free body diagram for the shaft bevel gear is shown in ***Figure 4.9*** below:

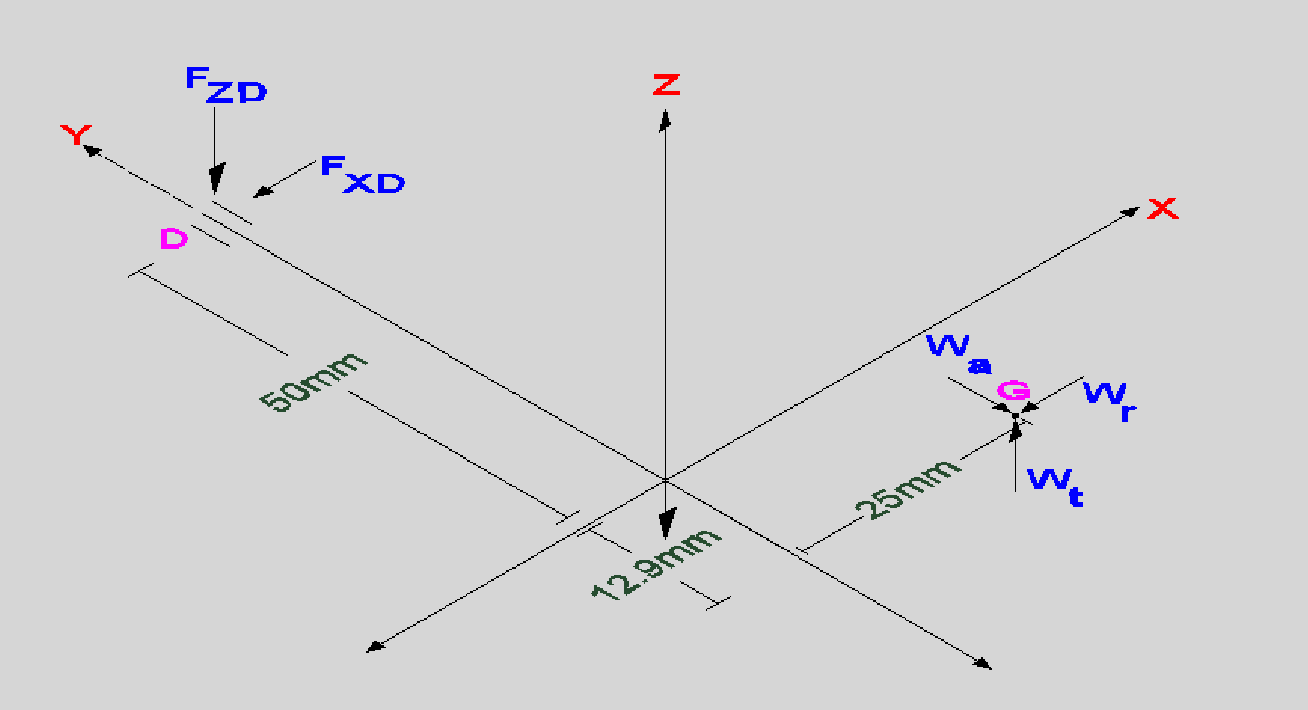

Figure 4.9 free body diagram

To find the transmitted load Wt, equation (1) is used:

$$Wt = \frac{60000 * H}{\pi * d * n} \qquad (4-19)$$

$$Wt = \frac{60000 * 0.02}{\pi * 25.8 * 200} = 0.074KN$$

To find the radial force Wr, and the axial force Wa, equation (4-17) and equation (4-18) are used:

Wr = Wt tan φ cos γ
Wr= 0.074 * tan (26.6) * cos (63.43) = 0.012KN

Wa = Wt tan φ sin γ

Wa= 0.074 * tan (26.6) * sin (63.43) =0.024KN

So, The tangential force Wt = 0.074KN.

The radial force Wr = 0.012KN.

The axial force Wa = 0.024KN.

where Wr is in the −x direction and Wa is in the −y direction, as illustrated in the isometric sketch of Fig (3)
In preparing to take a sum of the moments about the bearing D, define the position vector from D to G as:

$R_G = 25i - (50 + 12.9j) = 25i - 63j$

Then, summing moments about D gives:

$R_G \times W + T = 0$ (4-20)

When we place the details in Eq. (4), we get:

$(25i - 63j) \times (-0.012i - 0.024j + 0.074k) + T j = 0$

After the two cross products are taken, the equation becomes:

$(-4.66i + 1.85j + 0.156k) + T j = 0$

from which

$T_j = 1.85$ KN.mm = 1.85 N.m

summing the forces to zero. give us:

$F_D + W = 0$ (4-21)

When the details are inserted, Eq. (4-21) becomes:

$F_{xD}i + F_{zD}k + (-0.012i - 0.024j + 0.074k) = 0$

from which

$F_{xD}i = 12N$
$F_{zD}k = 74N$

The torque subjected on the shaft that is connected to the power screw Tj=1. 85N.m
And the forces subjected on the bearing D are 12N on the x-axis, 74N on the z-axis

These are all shown in Fig.3 in the proper directions.

4.1.5 Shafts and Shaft Component

A shaft is a rotating member, usually of circular cross section, used to transmit power or motion. It provides the axis of rotation, or oscillation, of elements such as gears, pulleys, flywheels, cranks, sprockets, and the like and controls the geometry of their motion.

In our forklift we need to use a shaft to transmit the movement from the motor to gears and wheels, and we will use these equations to design our shafts:

The forces on the shaft:

$$W = \frac{W_t}{cos\emptyset} \qquad (4-22)$$

In SI units → $W_t = \frac{60000*H}{\pi*d*n}$, in BG units → $W_t = \frac{33000*H}{V}$

Stresses in general case:

$$\sigma' = ((\sigma_a + \sigma_m)^2 + 3(\tau_a + \tau_m)^2)^{1/2} \qquad (4-23)$$

<u>Distortion Energy Theory</u>

$$\sigma_a' = (\sigma_a^2 + 3\tau_a^2)^{1/2}$$

$$\sigma_m' = (\sigma_m^2 + 3\tau_m^2)^{1/2}$$

$$\frac{1}{n_f} = \frac{\sigma_a'}{S_e} + \frac{\sigma_m'}{S_{ut}}$$

The shaft that is used must be proportional with the bevel gear we choose, and the smallest shaft has a diameter of 0.02 m therefore, and considering the loads that were obtained from the bevel gear force analysis we assumed that the shaft and the bearings is safe from the stress and fatigue applied on It without calculating, due to the large diameter and low forces.

4.2 The parts availability:

To construct and assemble our project we need all the necessary parts and equipment. The necessary parts and equipment are available, we made some of these equipments and we bought some stuff from the outside.

4.3 Appropriate safety measures

In any machine or any part, we design, we must to take care about the safety. In forklifts the most important point is to prevent the forklift from tipping over when it lifts the weight.

To solve this problem, the designers developed a counter balance weight added in the rear or of the forklift which counter balance the weight of the carriage loaded on the forks such that the weight on the fork is not enough to tip over the forklift.

The counterbalanced weight can be added as a forklift frame and if the forklift is electric, large lead-acid battery itself could be counted as part of the counterweight.

Chapter 5: Results, Analysis & discussion

A preliminary study of this project was done, and the necessary information was collected to enable us to understand how this machine works, what parts and components are made and searched the availability of the parts and determined weather to buy or to make the parts.

As mentioned previously, several parts are needed to make this machine such as gears, shafts, power screw the outer structure and several other pieces. The equations and laws of the design book are also stated, which were discussed during the design courses, designing these pieces to meet the required specifications will be needed in the future.

As for the power source, it will be electric powered with a battery working both as a source of power and a counterbalance for the forklift.

The forklift can carry a mass of ten kilograms (10 kg) and has a dimension as follows, total width of the forklift is 0.3m, total length is 0.3m. and the package is lifted to a Height of 0.66m .

After the design calculation we selected the two motors used in this project, the first is for lifting and it has a power of 0.026 HP and a speed of 200 rpm, the second motor is for moving the wheels and it has a power of 0.18 HP and a speed of 100 rpm.

When calculating the safety factor for the bending, shear, and welding of the fork it turned out to be extremely safe to use, and the power screw is self-locking.

Chapter 6: Conclusions and Recommendation

Conclusions:

We were able to create this useful instrument "fork lift" which is used successfully in different aspects of our life, as it is used to lift light objects for short distances, so for example this tool can be used to lift books at libraries, sheets and files at offices , as well as we can also use it to lifts small boxes of goods and products at malls, shop and lorries , and many different fields.

As a result, this efficient project can be extended and developed so that it is used in the market as a remote-controlled forklift that carries relatively small packages.

Recommendation:

The material used in this small forklift can withstand way more weight than just 10 KG, therefor, if the motors are changed then this can be a very useful machine, and the tilting mechanism can be added as well. Other students can work on this project and focus on the control system where it could save time, effort, and replace labor in the small shops or small inventories,

References

allied, m. (2017, 5 1). Retrieved from http://www.prnewswire.com/news-releases/forklift-truck-market-expected-to-reach-51-billion-by-2022-globally---allied-market-research-611644195.html

Bond, J. (2013). Top 20 Lift truck suppliers. *modren materials handling*.

Bose, D. (2011, december 22). *Types of Forklifts*. Retrieved from http://www.buzzle.com/articles/types-of-forklifts.html

Brindley, J. (2009, january). History of The Fork Lift Truck. *National Fork Truck Heritage Centre*. Retrieved from https://web.archive.org/web/20090831192629/http://www.warehousenews.co.uk/News/December_2005/F-History.html

Company, C. M. (2015). *Clark Material Handling Company*.

franck, H. F. (2010). Mathematicla Methods for Accident Reconstruction. In H. F. franck.

mheda journal. (2013). Forklift Trucks The Backbone Of The Industry. *mheda journal*.

Mitchell, B. (2017). *WHAT ARE THE DIFFERENT 'TYPES' OF FORKLIFT TRUCK*. Retrieved from http://www.bendigomitchell.com/kb/forklift-truck-types

Mitchell, J. (2014). *Classes of Forklifts.*

Richard G. Budynas, K. N. (2011). *shigleys mechanical engineering design 9th edition.* McGraw_hill.

Sellick, T. (2017, may 22). *HISTORY OF THE FORKLIFT TRUCK - COUNTERBALANCED*. Retrieved from http://www.fork-lift-training.co.uk/history.html

Shao, Y. (2015). *Design and Analysis of New Flexible and Safe Forklifts.* Boston: Northeastern University.

Wandel, M. (1985). *video design* . Retrieved from http://woodgears.ca/toys/forklift.html